Queen Mary
University of London

EBU5376
Digital Signal Processing

Fast Fourier Transform (FFT) – Part 2

Module Organizer: Dr Yixuan Zou yixuan.zou@qmul.ac.uk

Outline

- Butterfly Operation
- Decimation-in-Time (DIT)
- Decimation-in-Frequency (DIF)

Outline

- Butterfly Operation
- Decimation-in-Time (DIT)
- Decimation-in-Frequency (DIF)

Decomposition of DFT

- When $N = 4$, the decomposition equations becomes

$$X[0] = X_1[0] + X_2[0],$$
$$X[1] = X_1[1] + W_4^1 X_2[1],$$
$$X[2] = X_1[0] - X_2[0],$$
$$X[3] = X_1[1] - W_4^1 X_2[1],$$

Reorder →

$$\boxed{\begin{aligned} X[0] &= X_1[0] + X_2[0], \\ X[2] &= X_1[0] - X_2[0], \end{aligned}}$$

$$\boxed{\begin{aligned} X[1] &= X_1[1] + W_4^1 X_2[1], \\ X[3] &= X_1[1] - W_4^1 X_2[1], \end{aligned}}$$

Where $X_1[k]$ is the DFT of $\{x[0], x[2]\}$ and $X_2[k]$ is the DFT of $\{x[1], x[3]\}$, expressed as:

$$\boxed{\begin{aligned} X_1[0] &= x[0] + x[2] \\ X_1[1] &= x[0] - x[2] \end{aligned}}$$

$$\boxed{\begin{aligned} X_2[0] &= x[1] + x[3] \\ X_2[1] &= x[1] - x[3] \end{aligned}}$$

Butterfly Operation

- In the previous slide, each set of equations follows the same structure:
  1. two inputs produce two outputs, with one output as a sum and the other as a difference
  2. a twiddle factor applied to the second term
- The **butterfly operation** is a structured way to visualize and compute the sum-difference pattern in FFT
- It shows **how pairs of values interact** at each stage of FFT and how the results propagate to the next stage.

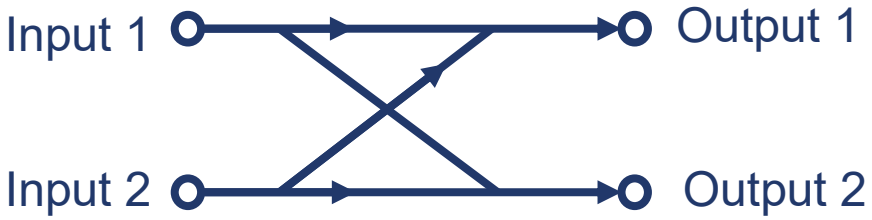

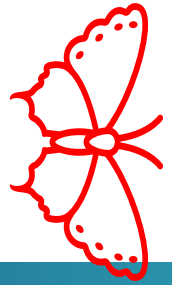

Butterfly Operation

- The butterfly operation in FFT can be visualized by

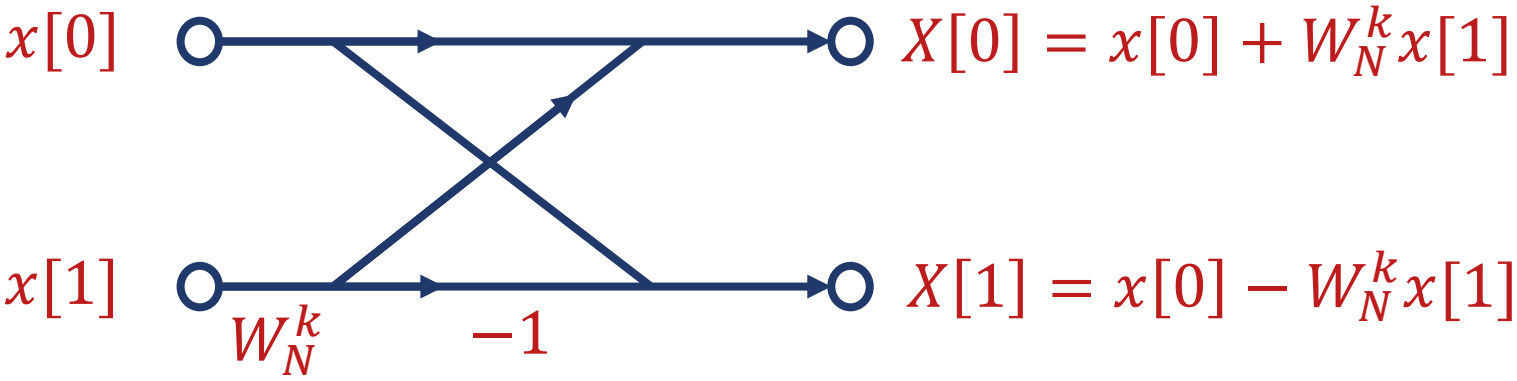

Butterfly Operation

- Example 1: Use butterfly diagrams to visualize the following computations:

$$X_1[0] = x[0] + x[2]$$

$$X_1[1] = x[0] - x[2]$$

$$X_2[0] = x[1] + x[3]$$

$$X_2[1] = x[1] - x[3]$$

Butterfly Operation

- <u>Example 2</u>: Use butterfly diagrams to visualize the following computations:

$$X[0] = X_1[0] + X_2[0],$$

$$X[2] = X_1[0] - X_2[0],$$

$$X[1] = X_1[1] + W_4^1 X_2[1],$$

$$X[3] = X_1[1] - W_4^1 X_2[1],$$

Butterfly Operation

- Example 3: Form the full butterfly diagram of a **4-point DFT** by directly connecting the outputs of Example 1 as the inputs to Example 2, keeping the **inputs in the bit-reversed order**.

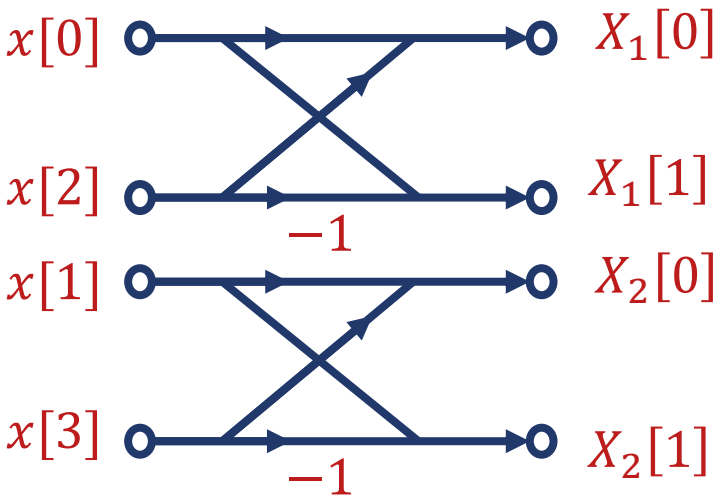

Example 1

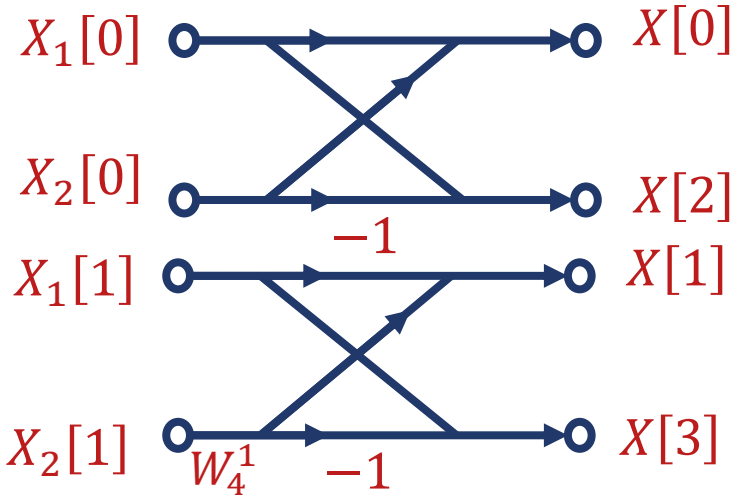

Example 2

Butterfly Operation

- Example 4: Form the full butterfly diagram of a **4-point DFT** by directly connecting the outputs of Example 1 as the inputs to Example 2, keeping the **outputs in the bit-reversed order**.

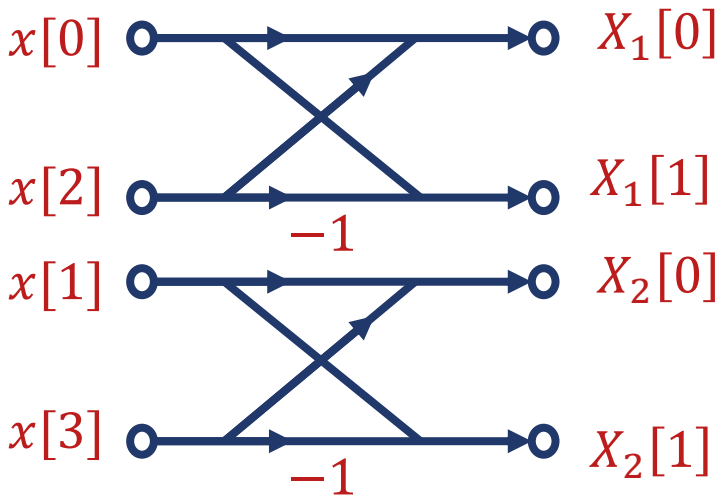

Example 1

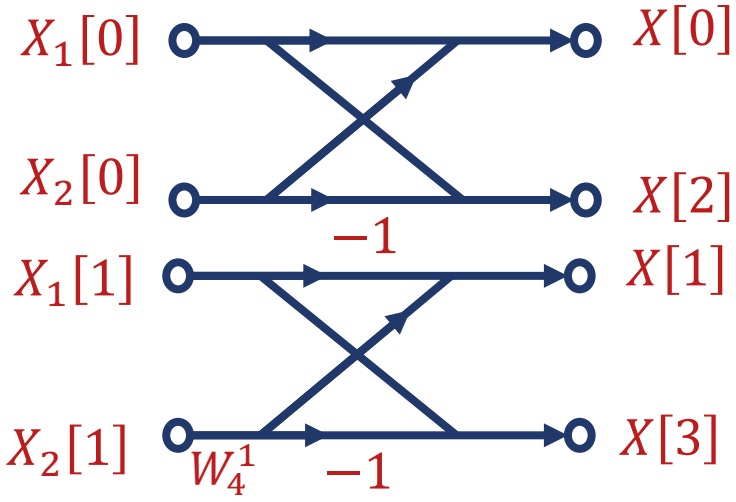

Example 2

Outline

- Butterfly Operation
- Decimation-in-Time (DIT)
- Decimation-in-Frequency (DIF)

Decimation-in-Time (DIT) FFT

- Although, in the previous examples, DIT-FFT and DIF-FFT involve the same calculations when looking at their butterfly diagrams, their mathematical expressions are significantly different
- So far, our derivation from DFT to FFT follows the DIT-FFT approach:

$$X(k) = X_1(k) + W_N^k X_2(k)$$

$$k = 0,1,\dots,N/2-1$$

$$X(k+N/2) = X_1(k) - W_N^k X_2(k)$$

where $X[k]$ is the N-point DFT, $X_1[k]$ is the DFT of the even-indexed inputs, and $X_2[k]$ is the DFT of the odd-indexed inputs.

- In DIT-FFT, the twiddle factor gets multiplied with the second input **before** the summation/subtraction.

Decimation-in-Time (DIT) FFT

- Use the butterfly diagram to visualize the calculations:

N/2-point DFT of the even-indexed inputs

N/2-point DFT of the odd-indexed inputs

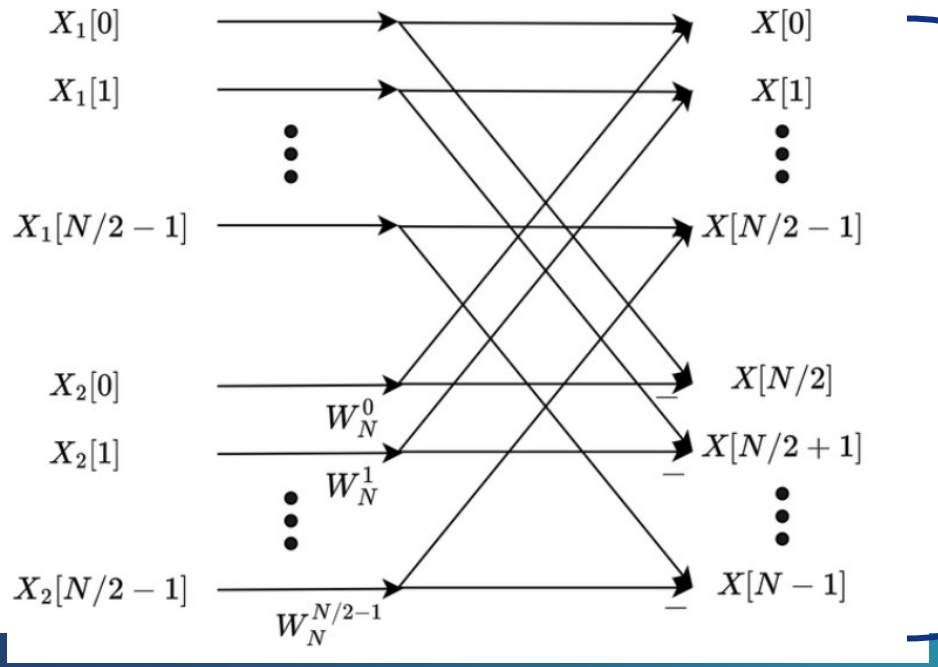

N-point DFT of all N inputs

Decimation-in-Time (DIT) FFT

- Further decomposing the N/2-point DFTs

Previous figure

Decompose into two N/4 DFTs

Decompose into two N/4 DFTs

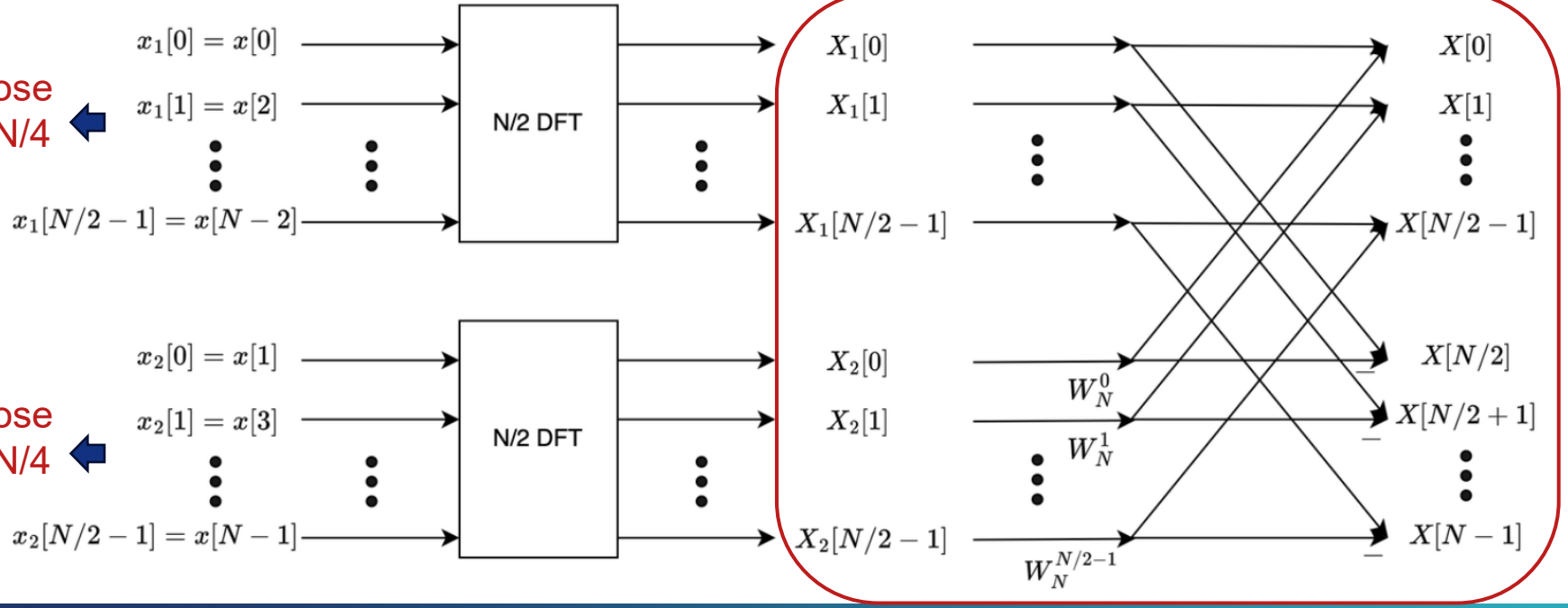

8-Point FFT Butterfly Diagram

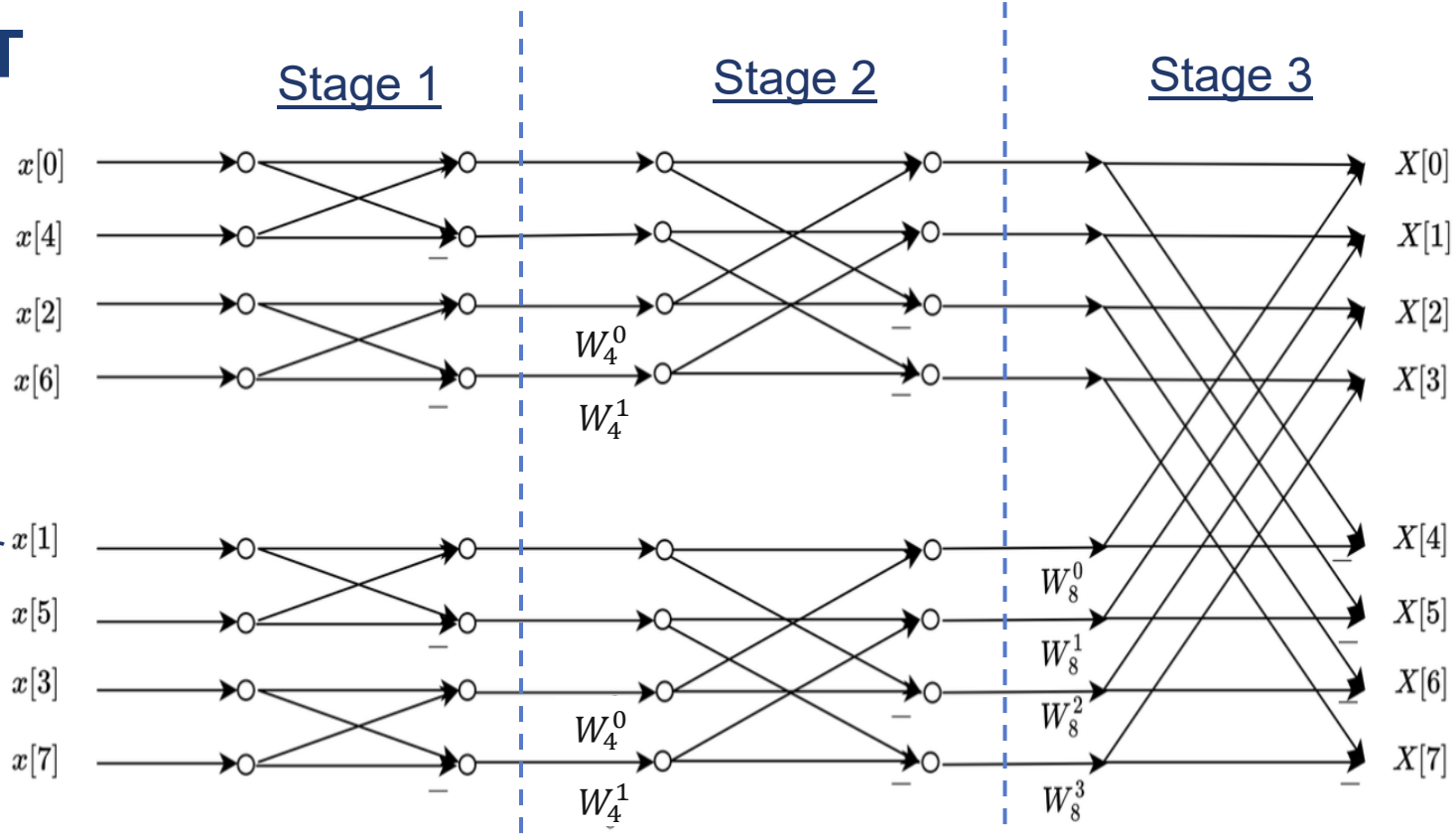

DIT-FFT

- ✓ Inputs in bit-reversed order
- ✓ Outputs in natural order
- ✓ N=8

Outputs of stage 1:
4 sets of 2-point DFTs

Outputs of stage 2:
2 sets of 4-point DFTs

Outputs of stage 3:
8-point DFT

Decimation-in-Frequency (DIF) FFT

- DIT-FFT is derived by splitting the DFT into even-indexed terms and odd-indexed terms.
- In contrast, DIF-FFT is derived by splitting the input sequence into the first half $(x[0], \dots, x[N/2-1])$ and second half $(x[N/2], \dots, x[N-1])$.

Decimation-in-Frequency (DIF) FFT

- DIF FFT divide an N-point DFT to two N/2-point DFTs in a different manner:

$$
\begin{aligned}
X(k) &= \sum_{n=0}^{N-1} x[n] W_N^{nk} \\
&= \sum_{n=0}^{N/2-1} x[n] W_N^{nk} + \sum_{n=N/2}^{N-1} x[n] W_N^{nk} \\
&= \sum_{n=0}^{N/2-1} x[n] W_N^{nk} + \sum_{n=0}^{N/2-1} x[n+N/2] W_N^{(n+N/2)k} \\
&= \sum_{n=0}^{N/2-1} x[n] W_N^{nk} + (-1)^k \sum_{n=0}^{N/2-1} x[n+N/2] W_N^{nk}
\end{aligned}
$$

$$W_{Nm}^{nkm} = W_{N/m}^{nk/m} = W_N^{nk}$$

$$W_N^{N/2} = -1$$

These are N/2-point sequences, not N/2-point DFTs, yet

Decimation-in-Frequency (DIF) FFT

- Continue from previous page:

$$X(k) = \sum_{n=0}^{N/2-1} x[n]W_N^{nk} + (-1)^k \sum_{n=0}^{N/2-1} x[n+N/2]W_N^{nk}$$

When k is an even number ($k = 2r$): $(-1)^k = 1$

When k is an odd number ($k = 2r+1$): $(-1)^k = -1$

So, we can reformulate $X[k]$ according to even and odd values of k:

$$X(2r) = \sum_{n=0}^{N/2-1} x[n]W_N^{n2r} + \sum_{n=0}^{N/2-1} x[n+N/2]W_N^{n2r} = \sum_{n=0}^{N/2-1} (x[n] + x[n+N/2])W_{N/2}^{nr}$$

$$X(2r+1) = \sum_{n=0}^{N/2-1} x[n]W_N^{n(2r+1)} - \sum_{n=0}^{N/2-1} x[n+N/2]W_N^{n(2r+1)} = \sum_{n=0}^{N/2-1} (x[n] - x[n+N/2])W_N^{n}W_{N/2}^{nr}$$

Decimation-in-Frequency (DIF) FFT

- By splitting the N-point DFT $X[k]$ according to even and odd values of k, we obtained:

$$X(2r) = \sum_{n=0}^{N/2-1} \overbrace{\boxed{(x[n] + x[n+N/2])}}^{X_1[n]} W_{N/2}^{nr}$$

$$X(2r+1) = \sum_{n=0}^{N/2-1} \overbrace{\boxed{(x[n] - x[n+N/2])W_N^n}}^{X_2[n]} W_{N/2}^{nr}$$

- By denoting

$$X_1[n] = x[n] + x[n+N/2]$$
$$X_2[n] = (x[n] - x[n+N/2])W_N^n$$

$X[2r]$ becomes an N/2-point DFT of $X_1[n]$

$X[2r+1]$ becomes an N/2-point DFT of $X_2[n]$

- Then, split $X[2r]$ and $X[2r+1]$ following the same rule and reformulation
- Repeat until reaching a set of 2-point DFTs.

Decimation-in-Frequency (DIF) FFT

- For example, when $N = 4$, the decomposition equations becomes

Butterfly Operation in DIF-FFT

- The basic butterfly operation in DIF-FFT can be visualized by

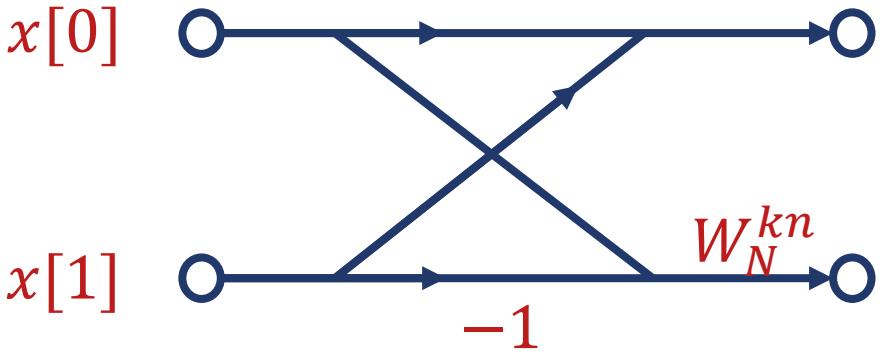

$$X[0] = x[0] + x[1]$$

$$X[1] = W_N^{kn}(x[0] - x[1])$$

- The basic butterfly operations for DIT-FFT and DIF-FFT are different
  - In DIT-FFT, multiplication before summation
  - In DIF-FFT, multiplication after summation
  - The only difference is where to place the *twiddle factor*

Decimation-in-Frequency (DIF) FFT

- Use the butterfly diagram to visualize the DIF-FFT calculations:

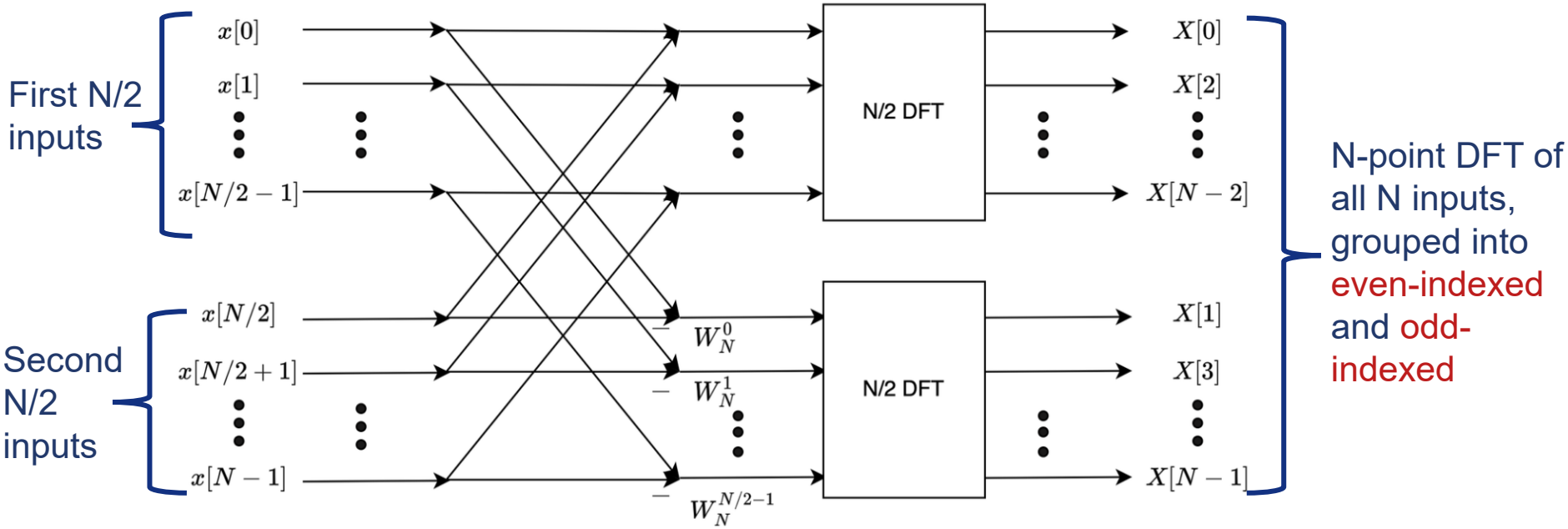

8-Point FFT Butterfly Diagram

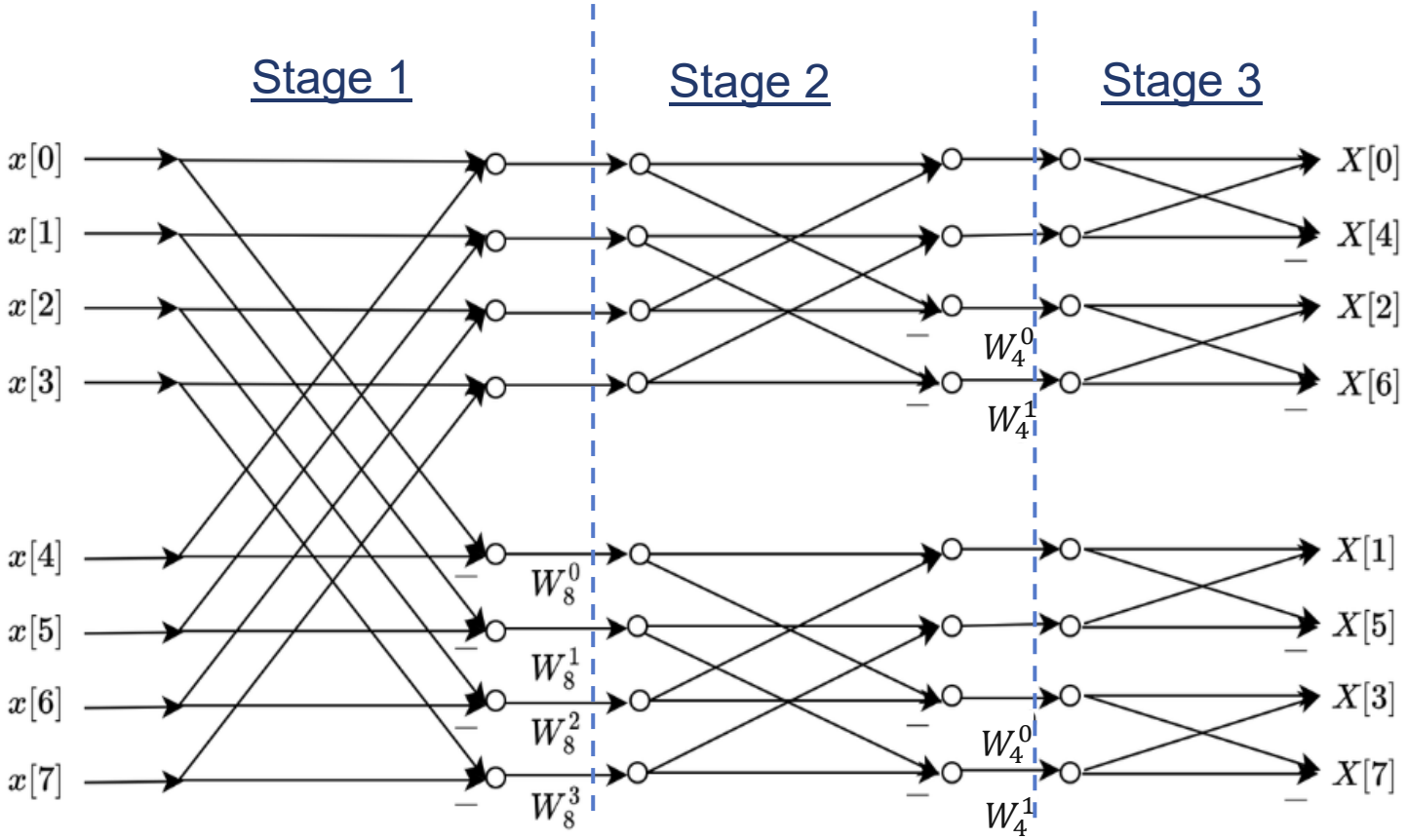

DIF-FFT

- ✓ Inputs in natural order
- ✓ Outputs in bit reversed order

FFT – Computational Complexity

- <u>FFT Computational Complexity</u>
  - Each butterfly structure contains 2 complex additions, 1 complex multiplication.
  - An N point FFT consists of $\log_2 N$ stages.
  - Each stage contains N/2 butterfly structures.

FFT – Computational Complexity

- <u>FFT Computational Complexity</u>
  - Total number of **complex additions** in FFT is calculated by

$$A_c = 2 * \frac{N}{2} * \log_2 N = N \log_2 N$$

  - Total number of **complex multiplications** in FFT is calculated by

$$M_c = 1 * \frac{N}{2}(\log_2 N - 1) = \frac{N}{2}(\log_2 N - \log_2 2) = \frac{N}{2}\log_2 \frac{N}{2}$$

FFT – Computational Complexity

- FFT vs. DFT
  - **N-point DFT**: N^2 times complex multiplication and $N(N-1)$ times complex addition. The order of complexity is $O(N^2)$
  - **N-point FFT**: $\frac{N}{2}\log_2\left(\frac{N}{2}\right)$ times complex multiplication, $N\log_2 N$ times complex addition. The order of complexity is $O(NlogN)$
  - FFT can achieve the exact same output as DFT, so it is not an approximation.

Summary

- There two common FFT algorithms:
  1. Decimation in Time (DIT)
     - the inputs need to be rearranged into bit-reversed order, where the outputs are in their natural order.
  2. Decimation in Frequency (DIF)
     - the inputs are in their natural order, whereas the outputs are in the bit-reversed order.
- When applying FFT, it is generally assumed that the length of the input is $N = 2^M$, where M is an integer. If not satisfied, zero padding is employed to ensure this assumption

Summary

- Exam scope on butterfly diagram:
  - Hand-drawing the butterfly diagram will not be required
  - A plain butterfly diagram and a set of inputs may be provided, and students will be expected to compute the FFT outputs using the given structure.

Queen Mary
University of London